AD23N开发板实物

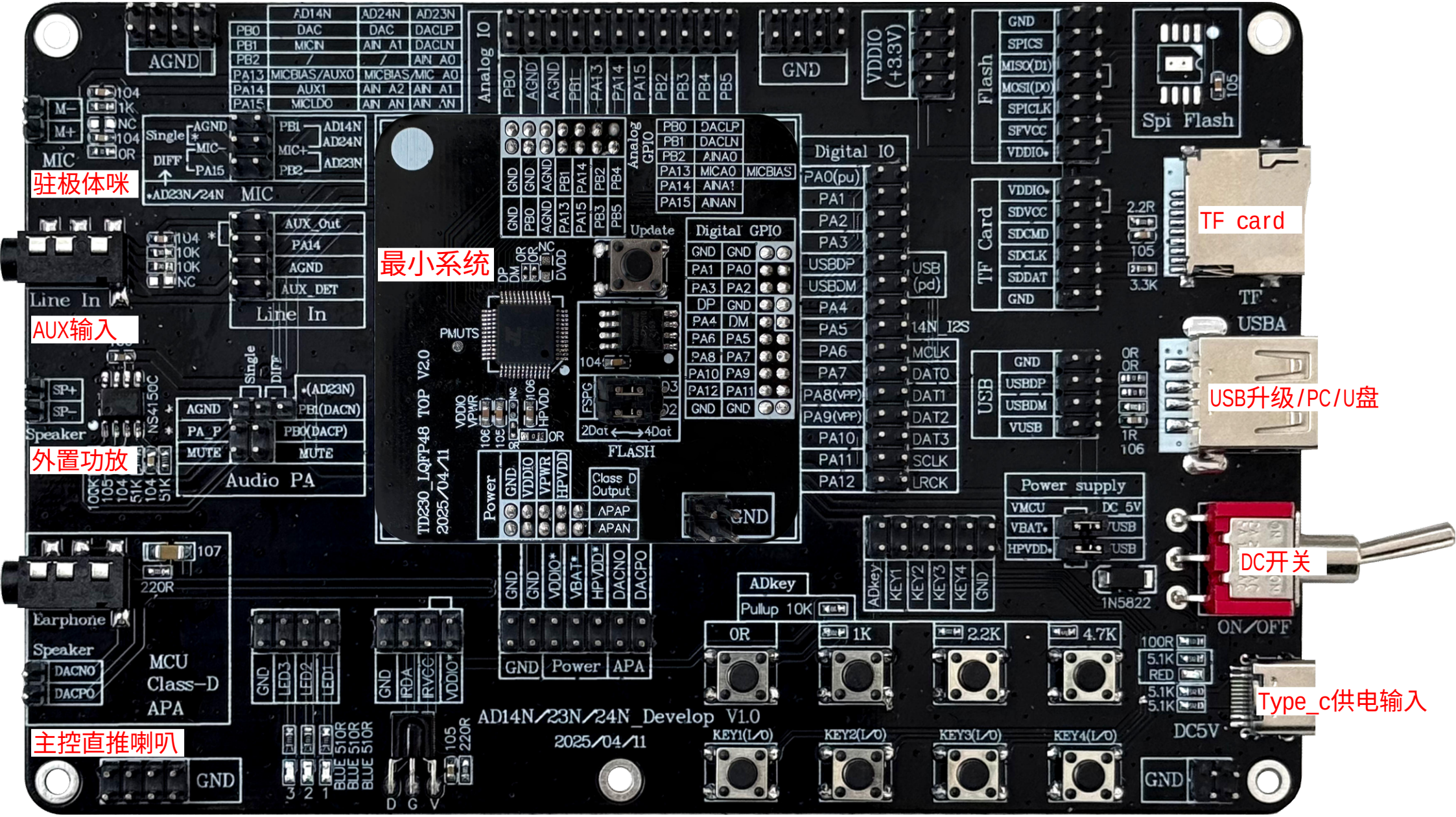
SPI FLASH
驻极体咪
最小系统
AUX输入
外置功放
TF card
USB升级/PC/U盘
DC开关
Type_c供电输入
主控直推喇叭
LED灯
红外接收
按键
AD14N/23N/24N_Develop V1.0
2025/04/11
TD230_LQFP48 TOP V2.0
2025/04/11
Analog IO
Digital IO
Digital GPIO
Analog GPIO
Flash
Spi Flash
TF Card
USB
Power supply
Audio PA
Line In
Speaker
Earphone
MCU
Class-D
APA
ADkey
Pullup 10K
ON/OFF
DC5V
FLASH
Update
PMUTS
Power
Class D Output
14N_I2S

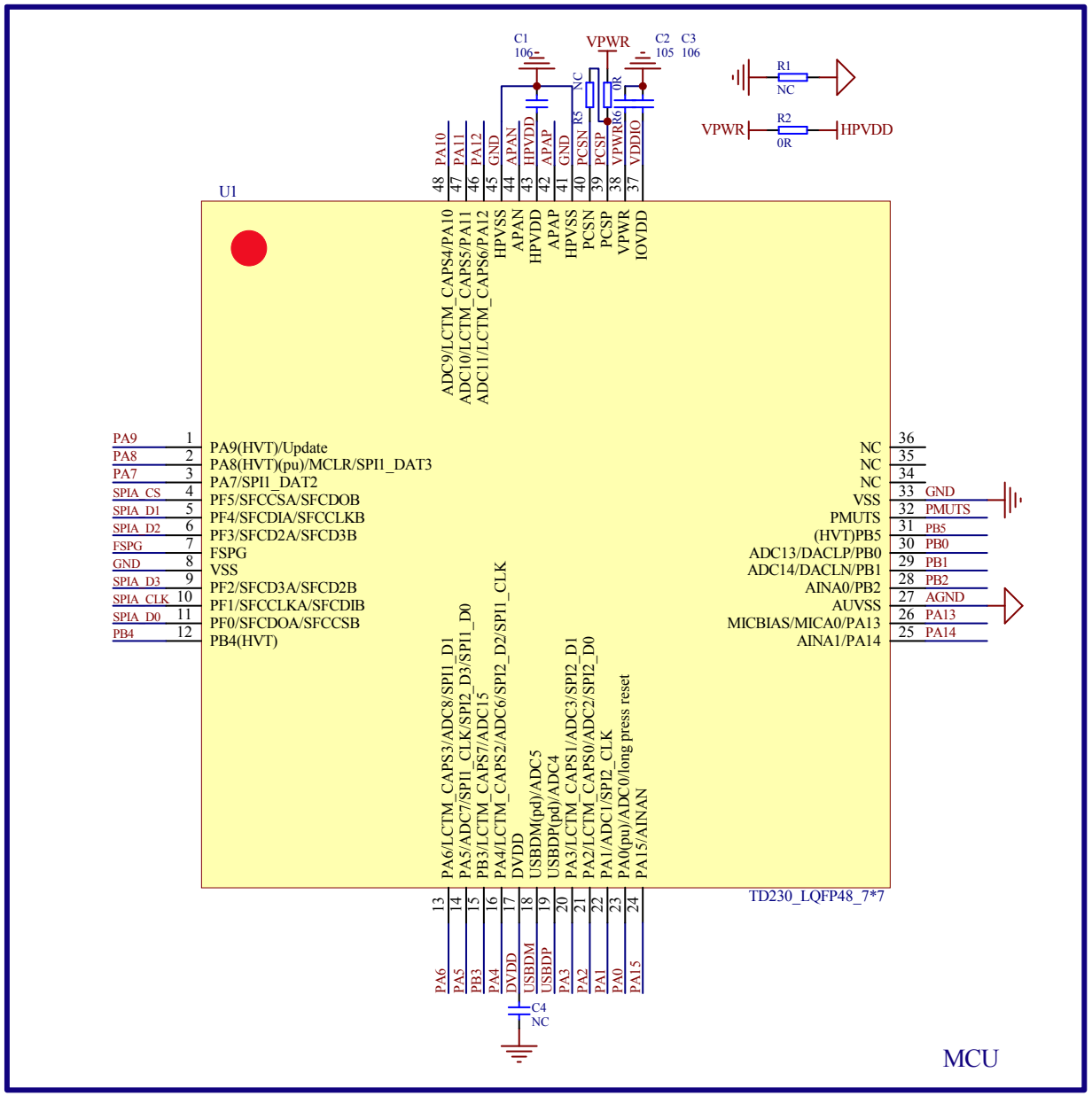
U1
C1 106
VPWR
C2 105
C3 106
R1 NC
R2 0R
VPWR
HPVDD
NC R5
0R R6
48 PA10
47 PA11
46 PA2
45 GND
44 APAN
43 HPVDD
42 APAP
41 GND
40 PCSN
39 PCSP
38 VPWR
37 VDDIO
ADC9/LCTM_CAPS4/PA10
ADC10/LCTM_CAPS5/PA11
ADC11/LCTM_CAPS6/PA12
HPVSS
APAN
HPVDD
APAP
HPVSS
PCSN
PCSP
VPWR
IOVDD
PA9 1 PA9(HVT)/Update
PA8 2 PA8(HVT)(pu)/MCLR/SPI1_DAT3
PA7 3 PA7/SPI1_DAT2
SPIA_CS 4 PF5/SFCCSA/SFCDOB
SPIA_D1 5 PF4/SFCDIA/SFCCLKB
SPIA_D2 6 PF3/SFCD2A/SFCD3B
FSPG 7 FSPG
GND 8 VSS
SPIA_D3 9 PF2/SFCD3A/SFCD2B
SPIA_CLK 10 PF1/SFCCLKA/SFCDIB
SPIA_D0 11 PF0/SFCDOA/SFCCSB
PB4 12 PB4(HVT)
NC 36
NC 35
NC 34
VSS 33 GND
PMUTS 32 PMUTS
(HVT)PB5 31 PB5
ADC13/DACLP/PB0 30 PB0
ADC14/DACLN/PB1 29 PB1
AINA0/PB2 28 PB2
AUVSS 27 AGND
MICBIAS/MICA0/PA13 26 PA13
AINA1/PA14 25 PA14
PA6/LCTM_CAPS3/ADC8/SPI1_D1
PA5/ADC7/SPI1_CLK/SPI2_D3/SPI1_D0
PB3/LCTM_CAPS7/ADC15
PA4/LCTM_CAPS2/ADC6/SPI2_D2/SPI1_CLK
DVDD
USBDM(pd)/ADC5
USBDP(pd)/ADC4
PA3/LCTM_CAPS1/ADC3/SPI2_D1
PA2/LCTM_CAPS0/ADC2/SPI2_D0
PA1/ADC1/SPI2_CLK
PA0(pu)/ADC0/long press reset
PA15/AINAN
TD230_LQFP48_7*7
13 PA6
14 PA5
15 PB3
16 PA4
17 DVDD
18 USBDM
19 USBDP
20 PA3
21 PA2
22 PA1
23 PA0
24 PA15
C4 NC
MCU

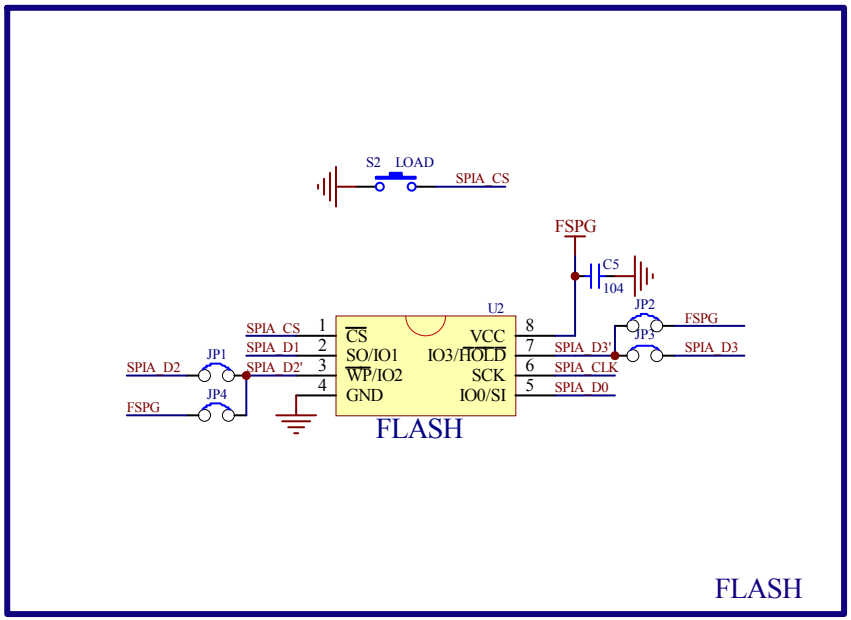
S2 LOAD
SPIA_CS
FSPG
C5 104
U2
JP2
JP3
FSPG
SPIA_D3
SPIA_CS 1
SPIA_D1 2
SPIA_D2' 3
4
CS
SO/IO1
WP/IO2
GND
VCC
IO3/HOLD
SCK
IO0/SI
8
7 SPIA_D3'
6 SPIA_CLK
5 SPIA_D0
SPIA_D2
JP1
JP4
FSPG
FLASH
FLASH

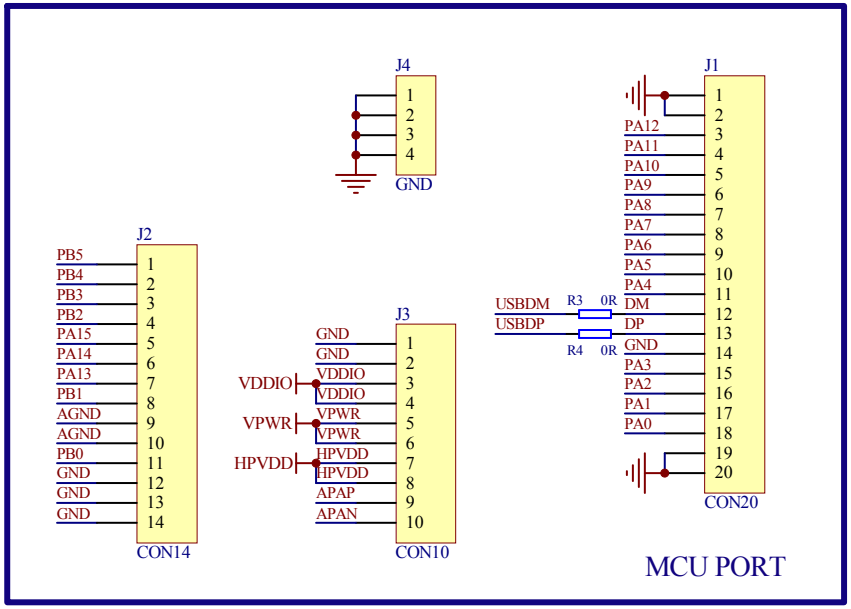
J4
1
2
3
4
GND
J2
PB5 1
PB4 2
PB3 3
PB2 4
PA15 5
PA14 6
PA13 7
PB1 8
AGND 9
AGND 10
PB0 11
GND 12
GND 13
GND 14
CON14
J3
GND 1
GND 2
VDDIO 3
VDDIO 4
VPWR 5
VPWR 6
HPVDD 7
HPVDD 8
APAP 9
APAN 10
CON10
VDDIO
VPWR
HPVDD
J1
PA12 1
PA11 2
PA10 3
PA9 4
PA8 5
PA7 6
PA6 7
PA5 8
PA4 9
DM 10
DP 11
GND 12
PA3 13
PA2 14
PA1 15
PA0 16
17
18
19
20
CON20
USBDM R3 0R
USBDP R4 0R
MCU PORT

AD14N/AD24N/AD23N开发板底板原理图

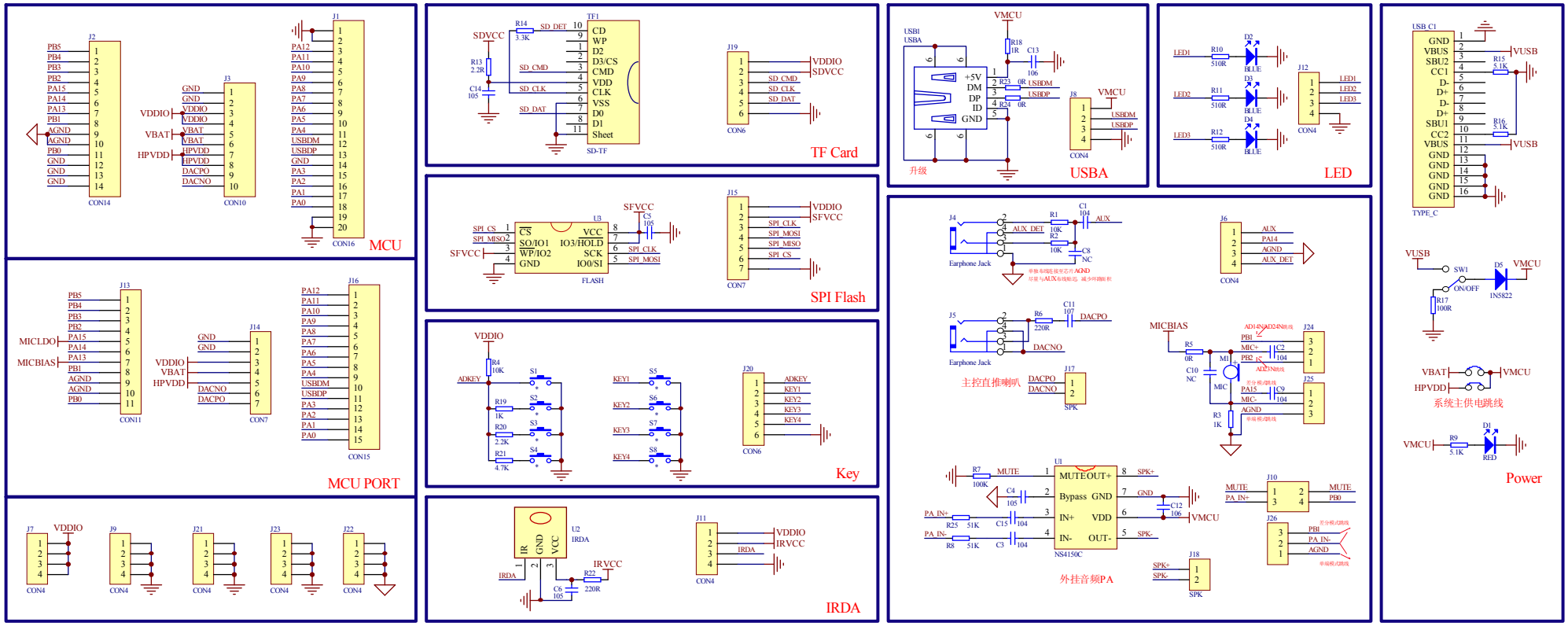

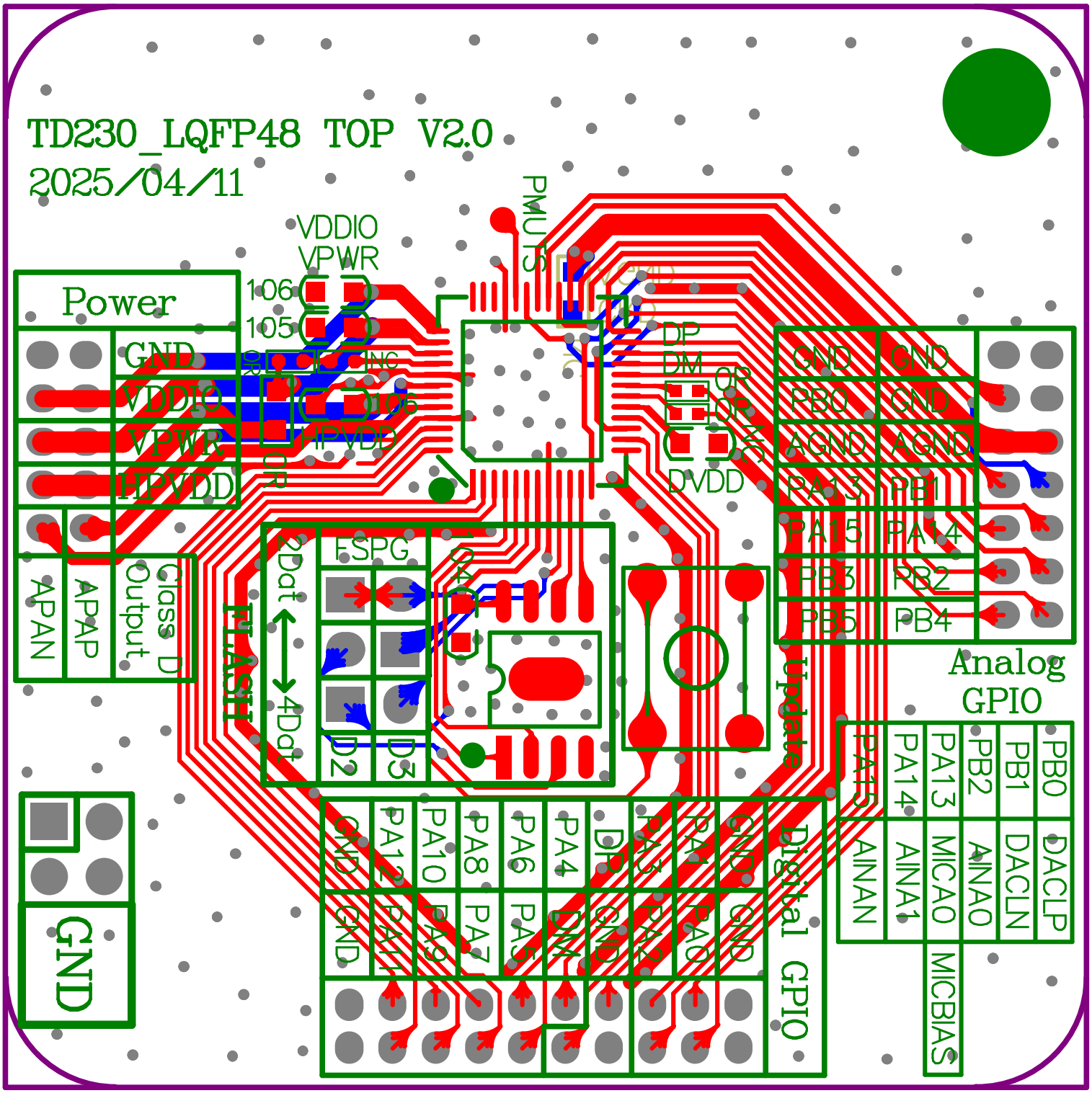
TD230_LQFP48 TOP V2.0
2025/04/11
Power
GND
VDDIO
VPWR
HPVDD
APAN
APAP
Class D Output
VDDIO
VPWR
106
105
ING
106
HPVDD
PMU5
DP
DM
DVDD
GND
PB0
AGND
PA13
PA15
PB3
PB5
GND
GND
AGND
PB1
PA14
PB2
PB4
Analog GPIO
PA15
PA14
PA13
PB2
PB1
PB0
AINAN
AINA1
MICAO
AINAO
DACLN
DACLP
MICBIAS
FLASH
2Dat
4Dat
ESPG
D2
D3
Update
GND
GND
PA12
PA10
PA8
PA6
PA4
DP
PA2
PA0
GND
GND
GND
PA11
PA9
PA7
PA5
DM
GND
PA3
PA1
GND
Digital GPIO
GND

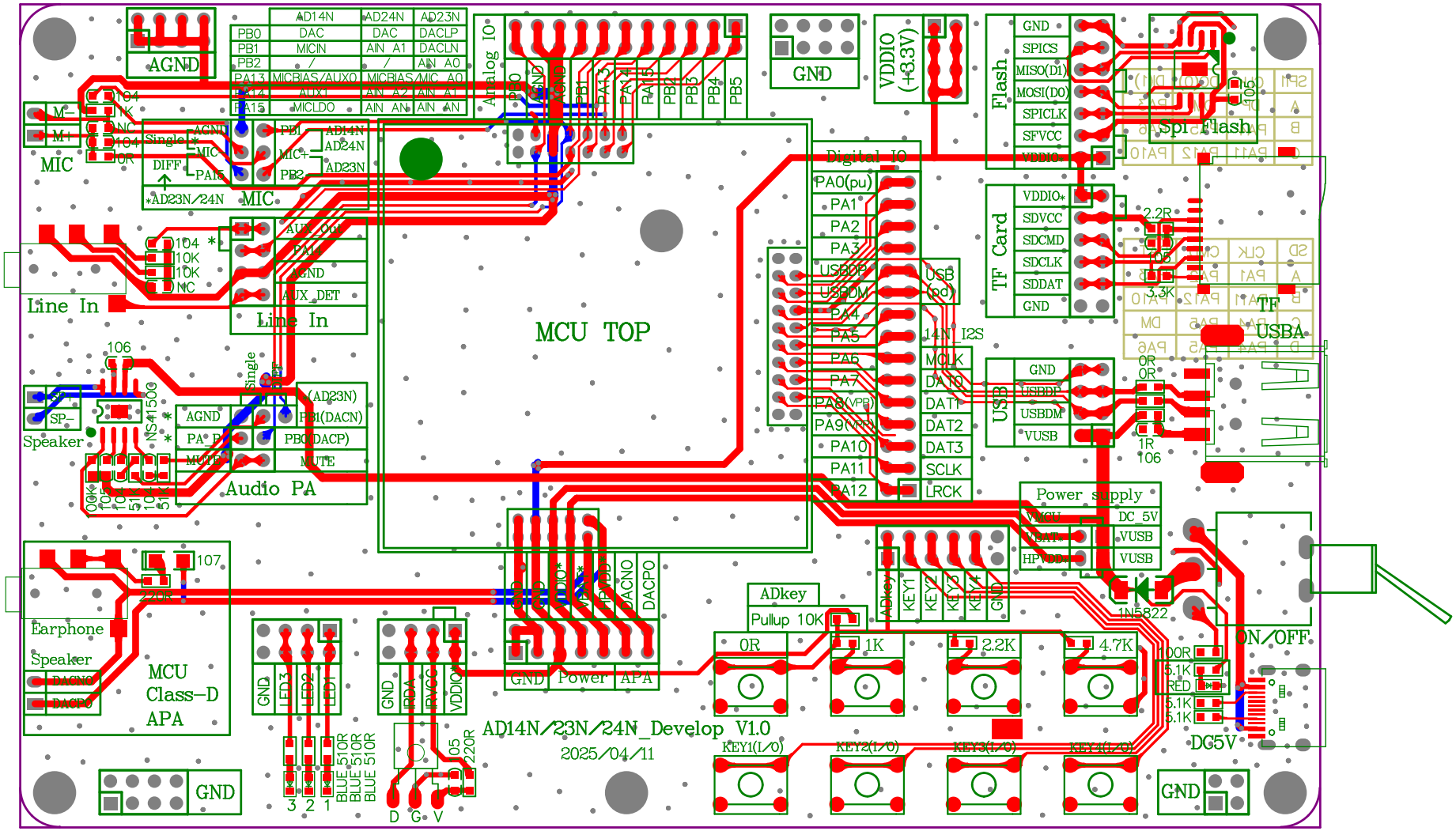
AGND
MIC
Line In
Speaker
Earphone
Speaker
MCU Class-D APA
GND
MCU TOP
Digital IO
Analog IO
Audio PA
Power
APA
Flash
Spi Flash
TF Card
TF
USBA
USB
Power supply
ADkey
Pullup 10K
ON/OFF
DC5V
AD14N/23N/24N_Develop V1.0
2025/04/11